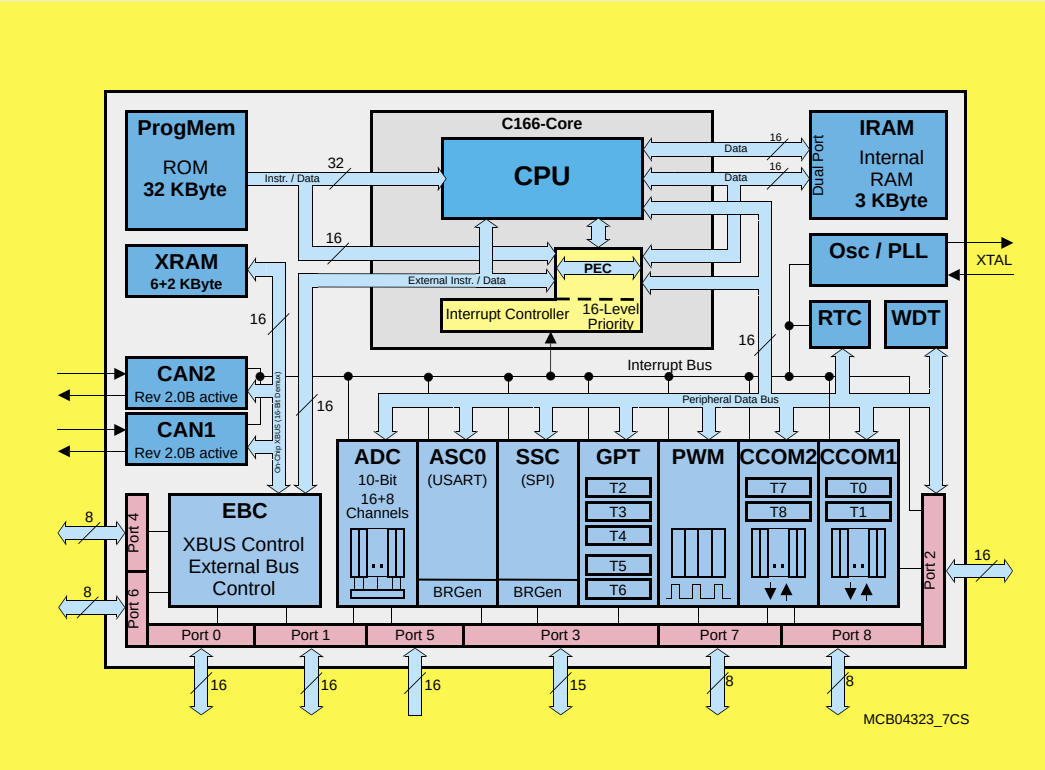

C167CS: BLOCK DIAGRAM

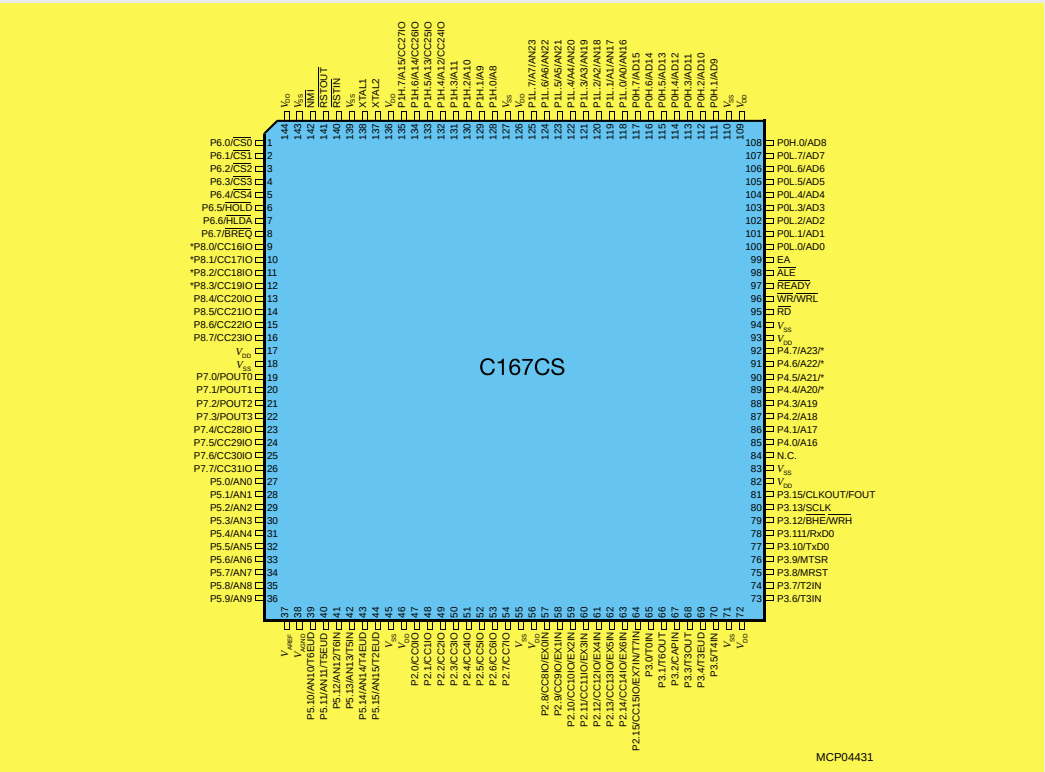

C167CS: PIN CONFIGURATION

* The marked pins of port 4 and port 8 can have CAN Interface lines assigned to them

Published by
Infineon Technologies AG

© Infineon Technologies Corp. 2000. All Rights Reserved.
This information describes certain components but shall not be considered as warranted characteristics of the components described. We reserve the right make technical changes at any time. All warranties regarding the circuits, descriptions and charts, including but not limited to warranties of non- infringement, are hereby disclaimed. Infineon Technologies is an approved CECC manufacturer.

For further information on technology, delivery terms and conditions and prices please contact your nearest Infineon Technologies Office.

Warnings
Due to technical requirements components may contain dangerous substances. For information on particular components, please contact your nearest Infineon Technologies office.

Infineon Technologies components may only be used in life-support devices or systems with the express written approval of Infineon Technologies, if a failure of such components could cause the failure of that life-support device or system, or to affect the safety or effectiveness of that device or system. If they fail, it is reasonable to assume that the health of the user or other persons may be endangered.

Published by Infineon Technologies AG

Ordering No. B158-H7137-G5-X-7600
Printed in Germany
PS 09009.